Pin Arrangement

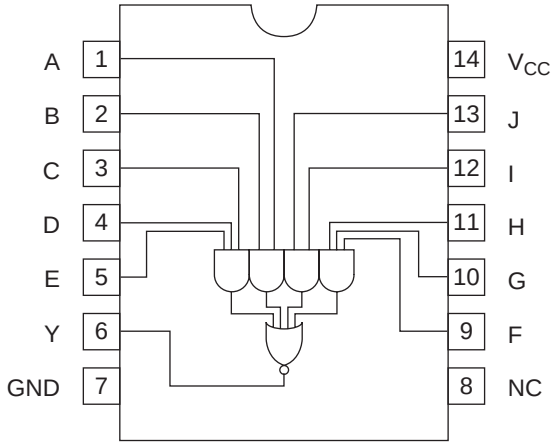

(Top view)

Circuit Schematic

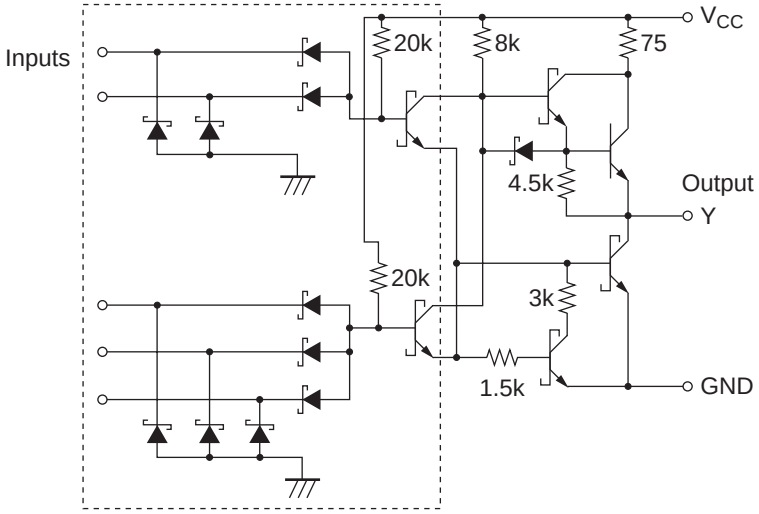

Note: The schematic within the dashed line is included the half input terminals of HD74LS54.

Absolute Maximum Ratings

Item	Symbol	Ratings	Unit
Supply voltage	V_{CC}	7	V
Input voltage	V_{IN}	7	V
Power dissipation	P_T	400	mW
Storage temperature	Tstg	–65 to +150	°C

Note: Voltage value, unless otherwise noted, are with respect to network ground terminal.

Recommended Operating Conditions

Item	Symbol	Min	Typ	Max	Unit
Supply voltage	Vcc	4.75	5.00	5.25	V
Output current	I_{OH}	—	—	–400	µA
	I_{OL}	—	—	8	mA
Operating temperature	Topr	–20	25	75	°C

Electrical Characteristics

(Ta = –20 to +75 °C)

Item	Symbol	min.	typ.*	max.	Unit	Condition
Input voltage	V_{IH}	2.0	—	—	V	
	V_{IL}	—	—	0.8	V	
Output voltage	V_{OH}	2.7	—	—	V	V_{CC} = 4.75 V, V_{IL} = 0.8 V, I_{OH} = –400 µA
	V_{OL}	—	—	0.5	V	I_{OL} = 8 mA, V_{CC} = 4.75 V, V_{IH} = 2 V
		—	—	0.4		I_{OL} = 4 mA
Input current	I_{IH}	—	—	20	µA	V_{CC} = 5.25 V, V_I = 2.7 V
	I_{IL}	—	—	–0.4	mA	V_{CC} = 5.25 V, V_I = 0.4 V
	I_I	—	—	0.1	mA	V_{CC} = 5.25 V, V_I = 7 V
Short-circuit output current	I_{OS}	–20	—	–100	mA	V_{CC} = 5.25 V
Supply current	I_{CCH}	—	0.8	1.6	mA	V_{CC} = 5.25 V
	I_{CCL}	—	1.0	2.0	mA	V_{CC} = 5.25 V
Input clamp voltage	V_{IR}	—	—	–1.5	V	V_{CC} = 4.75 V, I_{IN} = –18 mA

Note: * V_{CC} = 5 V, Ta = 25°C

Switching Characteristics

(V_{CC} = 5 V, Ta = 25°C)

Item	Symbol	min.	typ.	max.	Unit	Condition
Propagation delay time	t_{PLH}	—	12	20	ns	C_L = 15 pF, R_L = 2 kΩ
	t_{PHL}	—	12.5	20	ns	

Note: Refer to Test Circuit and Waveform of the Common Item "TTL Common Matter (Document No.: REJ27D0005-0100)".

Package Dimensions

DIP

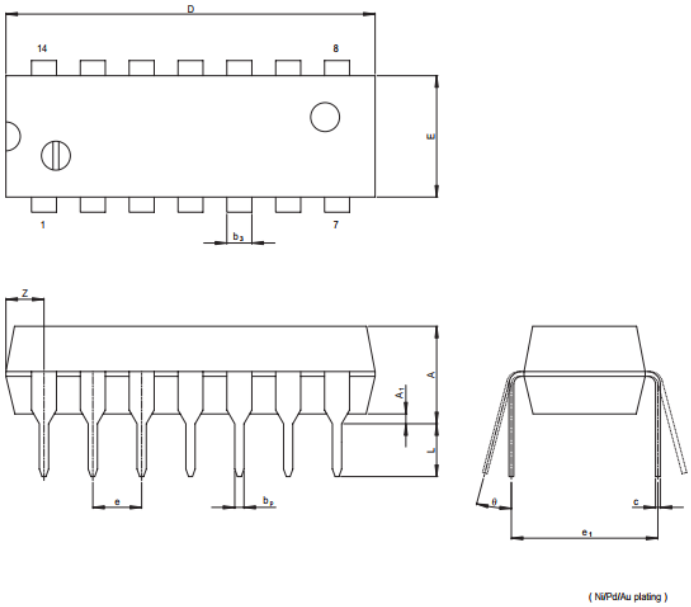

Reference Symbol	Dimension in Millimeters		
	Min	Nom	Max
e_1	—	7.62	—
D	—	19.2	20.32
E	—	6.3	7.4
A	—	—	5.06
A_1	0.51	—	—
b_p	0.40	0.48	0.56
b_3	—	1.30	—
c	0.19	0.25	0.31
θ	0°	—	15°
e	2.29	2.54	2.79
Z	—	—	2.39
L	2.54	—	—

以上信息仅供参考.如需帮助联系客服人员。谢谢 XINLUDA