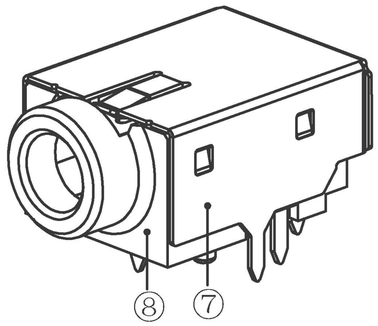

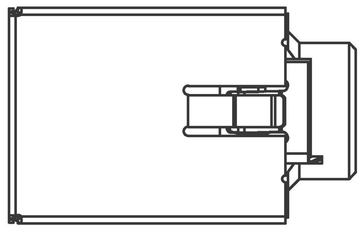

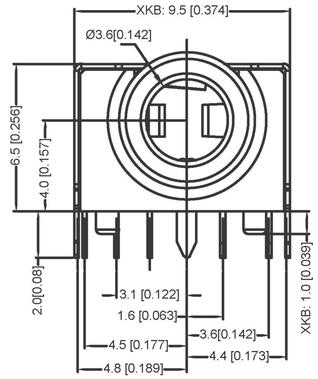

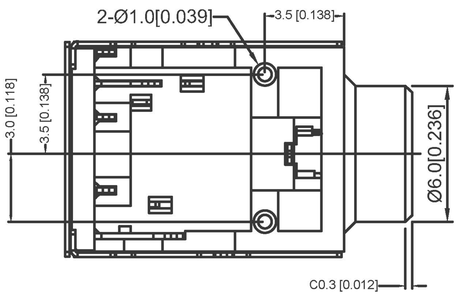

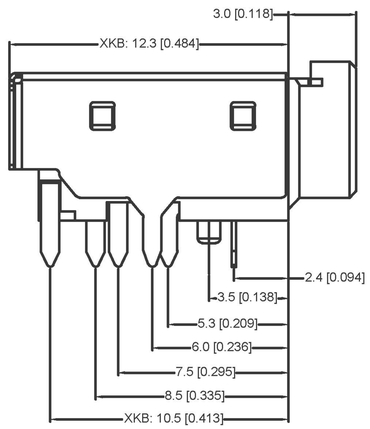

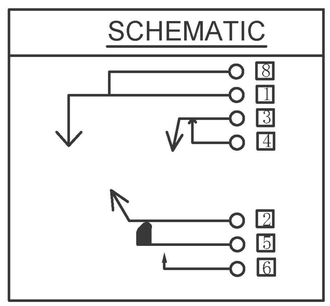

SPECIFICATION
产品规格
1.Rating: DC 30V 0.5A
额定值: DC 30V 0.5A
2.Contact resistance :<0.03Ω;
接触电阻:<0.03Ω;
3.Insulation resistance: >100MΩ(DC250V)
绝缘电阻: >100MΩ(DC250V)
4.Withstand voltage :500VAC;
耐受电压: 500VAC;
5.Insertion and extraction force:3-30N;
插拔力:3-30N;
6.life test:5,000 cycles.
寿命试验：5000次循环.

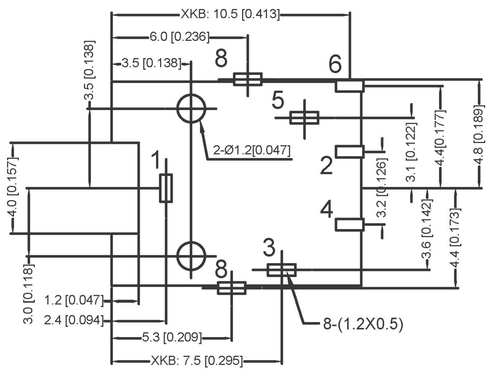

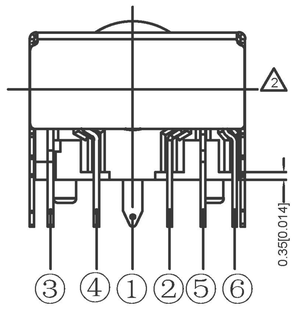

料号	Color
PJ-3043-B	BLACK
PJ-3043-R	Red
PJ-3043-G	Green

			MATERIAL	PLATING
8	SHELL	1	SUS301 0.2t	Ni60U"
7	HOUSING	1	PA9T	
6	CONTACT FOOT	1	COPPER ALLOY C5191	Ag15u" OVER Ni20U"
5	SPRING PIECE	1	COPPER ALLOY C5191	Ag15u" OVER Ni20U"
4	CURVE PIECE	1	COPPER ALLOY C5191	Ag15u" OVER Ni20U"
3	SPRING PIECE	1	COPPER ALLOY C5191	Ag15u" OVER Ni20U"
2	SPRING PIECE	1	COPPER ALLOY C5191	Ag15u" OVER Ni20U"
1	CONTACT FOOT	1	COPPER ALLOY C5191	Ag15u" OVER Ni50U"

P.C.B LAYOUT
TOP VIEW

广东星坤科技股份有限公司
生效日期
文件工程章

MARK	DESCRIPTION	DATE	REVISED	APPROVED
Δ				
Δ				
Δ				

REVISIONS

ANGLAR	±5°	
X.X	±0.2mm	
X.XX	±0.1mm	
X.XXX	±0.05mm	

UNSPECIFIED TOLERANCES

www.xk-dg.cn www.helloxkb.com www.helloxkb.cn

DSND		DATE		SCALE: N/A
DWN		DATE		VIEW:
CHKD		DATE		UNIT: mm/in
APPD		DATE		SIZE: A4

XKB INDUSTRIAL PRECISION CO.,LIMITED

MODEL TYPE: 3.5 PHONE JACK
PART NO.:
DWG NO.: PJ-3043-X

WEIGHT	SHEET	REVISION
1.0g	1/1	A0

X-ON Electronics

Largest Supplier of Electrical and Electronic Components

Click to view similar products for HDMI, Displayport & DVI Connectors ***category:***

Click to view products by XKB ***manufacturer:***

Other Similar products are found below :

30-1231 30-528 30-504 30-519 33DVIR-24S1B 47648-2000 2002-400 TC142X 769-103/021-000 1932649-1 CP30200GM3 67881 HAFBF HBLBH HBLBI HAFBG HAFBH HAGBF HAGBG HAGBI HAGBJ HBLBJ AABIE AABIF AABIG AABIH AABII AABIJ AABIK AABIL AACBE AACBF AACBG ABIBF ABIBG ABIBH 42154 AACBH AACBI AACBJ AACBK AACBL AAIBD AAIBF AAIBH AAIBI AANBF AANBG AANBH AANBI