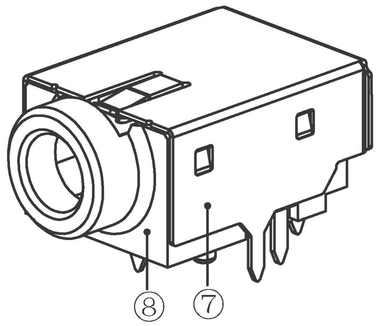

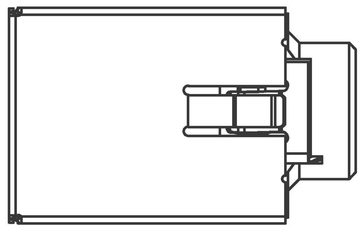

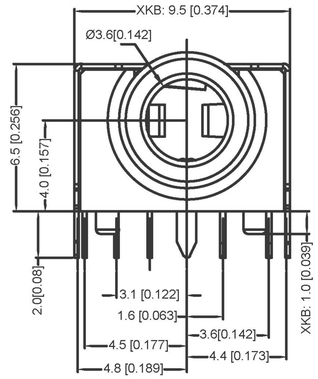

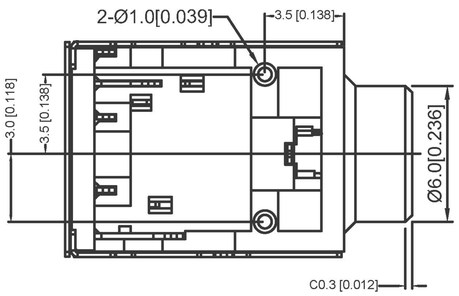

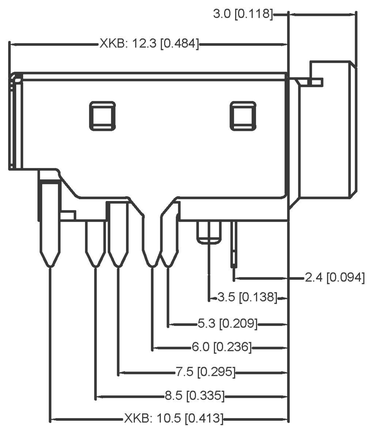

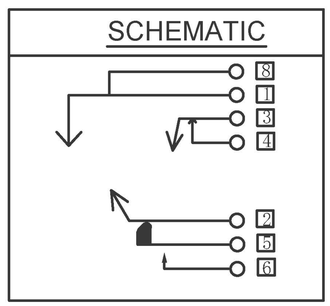

SPECIFICATION
产品规格
1.Rating: DC 30V 0.5A
额定值: DC 30V 0.5A
2.Contact resistance :<0.03Ω;
接触电阻:<0.03Ω;
3.Insulation resistance: >100MΩ(DC250V)
绝缘电阻: >100MΩ(DC250V)
4.Withstand voltage :500VAC;
耐受电压: 500VAC;
5.Insertion and extraction force:3-30N;
插拔力:3-30N;
6.life test:5,000 cycles.
寿命试验：5000次循环.

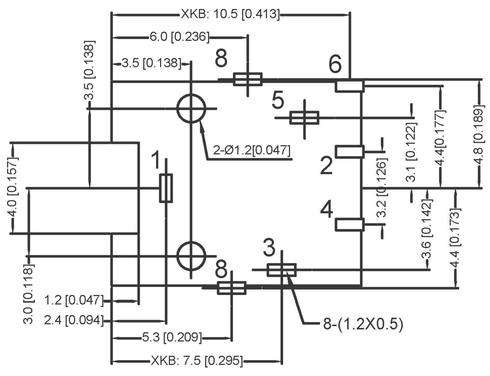

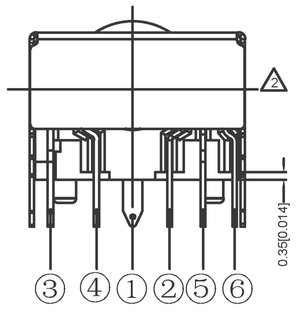

料号	Color
PJ-3043-B	BLACK
PJ-3043-R	Red
PJ-3043-G	Green

			MATERIAL	PLATING
8	SHELL	1	SUS301 0.2t	Ni60U"
7	HOUSING	1	PA9T	
6	CONTACT FOOT	1	COPPER ALLOY C5191	Ag15u" OVER Ni20U"
5	SPRING PIECE	1	COPPER ALLOY C5191	Ag15u" OVER Ni20U"
4	CURVE PIECE	1	COPPER ALLOY C5191	Ag15u" OVER Ni20U"
3	SPRING PIECE	1	COPPER ALLOY C5191	Ag15u" OVER Ni20U"
2	SPRING PIECE	1	COPPER ALLOY C5191	Ag15u" OVER Ni20U"
1	CONTACT FOOT	1	COPPER ALLOY C5191	Ag15u" OVER Ni50U"

P.C.B LAYOUT
TOP VIEW

广东星坤科技股份有限公司
生效日期
文件工程章

MARK	DESCRIPTION	DATE	REVISED	APPROVED
Δ				
Δ				
Δ				

REVISIONS

ANGLAR	±5°	
X.X	±0.2mm	
X.XX	±0.1mm	
X.XXX	±0.05mm	

UNSPECIFIED TOLERANCES

www.xk-dg.cn www.helloxkb.com www.helloxkb.cn

DSND		DATE		SCALE: N/A
DWN		DATE		VIEW:
CHKD		DATE		UNIT: mm/in
APPD		DATE		SIZE: A4

XKB INDUSTRIAL PRECISION CO.,LIMITED

MODEL TYPE: 3.5 PHONE JACK
PART NO.:
DWG NO.: PJ-3043-X

WEIGHT	SHEET	REVISION
1.0g	1/1	A0

X-ON Electronics

Largest Supplier of Electrical and Electronic Components

Click to view similar products for Phone Connectors ***category:***

Click to view products by XKB ***manufacturer:***

Other Similar products are found below :

R4F 14412GX E12BPKG MT333X 171-3302-EX NC3MG-V NP2RX-AU-SILENT-D JM2PB-AU BULK S2674 280L RJ5VI-S TM1R-AU TM2PJ-AU TM2PJ-AU BULK TS3PBJ-AU TS3PBMJ-AU MP-101 54B T10711 MT334F NJ3FP6F-P NPX-PROMO JS3PB-AU BULK XMT332A 114BPCSX CMT334B AA0-A4830-A00 PJ-218 PJ-320-3P SMT PJ-321A PJ-393-8P KH-PJ-327D-SMT PJ-320D PJ-3106M PJ-376 PJ-624 PJ-339 PJ-3200B PJ-307B-1.3-01 PJ-324 PJ-324M PJ-313D PJ-227 PJ-343 Red PJ-3106AC1 PJ-3505A PJ-321 KH-PJ-307-5P PJ-389 PJ-368-R