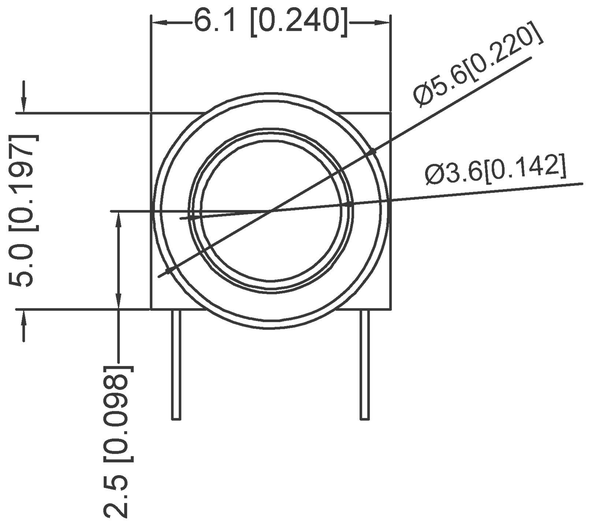

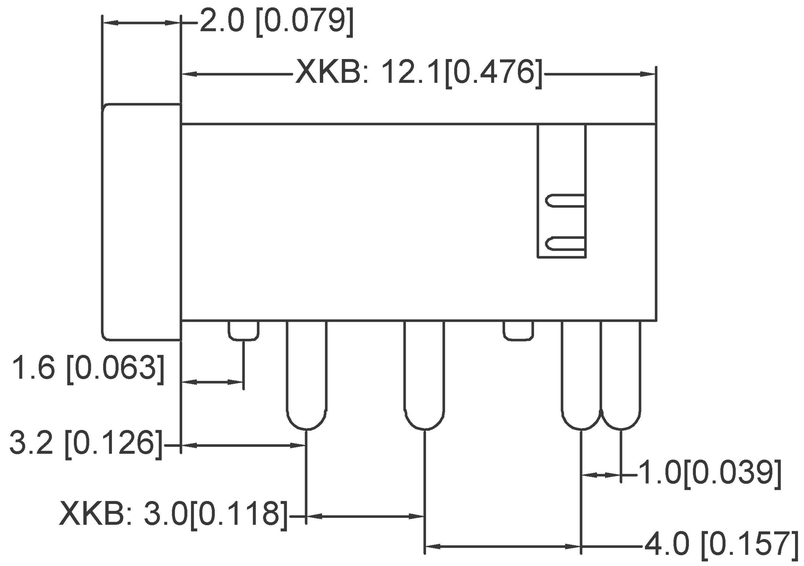

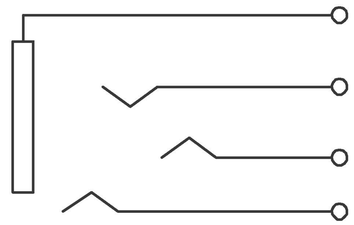

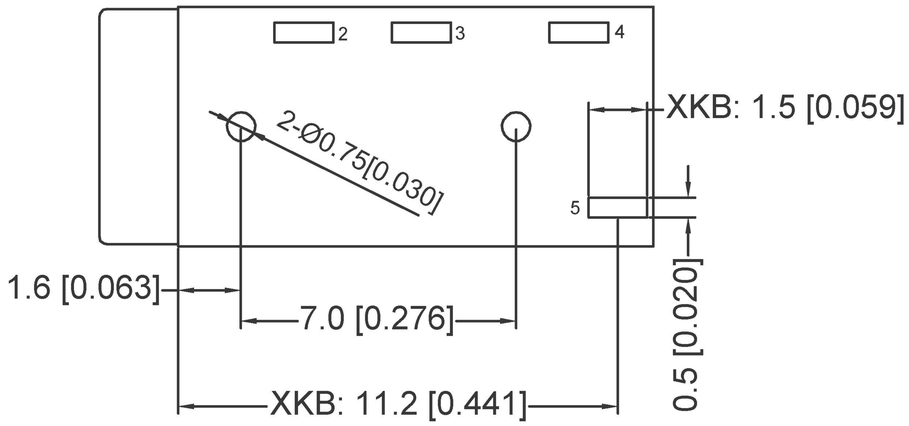

	MATERIAL	PLATING
terminal 2	H65	tin
terminal 3	H65	tin
terminal 4	H65	tin
terminal 5	H65	tin
plastic	LCP	

广东星坤科技股份有限公司

生		日
ΔX		期
ΔX		
ΔX		
MARK	DESCRIPTION	

文件工程章

DATE	REVISED	APPROVED		
			ANGLAR	±5°
			X.X	±0.2mm
			X.XX	±0.1mm
			X.XXX	±0.05mm

REVISIONS

UNSPECIFIED TOLERANCES

www.xk-dg.cn www.helloxkb.com www.helloxkb.cn

DSND		DATE		SCALE: N/A	MODEL TYPE: 3.5 PHONE JACK
DWN		DATE		VIEW:	PART NO.:
CHKD		DATE		UNIT: mm/in	DWG NO.: PJ-320AG-B
APPD		DATE		SIZE: A4	

XKB INDUSTRIAL PRECISION CO.,LIMITED

WEIGHT	SHEET	REVISION
1.0g	1/1	A0

X-ON Electronics

Largest Supplier of Electrical and Electronic Components

Click to view similar products for HDMI, Displayport & DVI Connectors ***category:***

Click to view products by XKB ***manufacturer:***

Other Similar products are found below :

30-1231 30-528 30-504 30-519 33DVIR-24S1B 47648-2000 2002-400 TC142X 769-103/021-000 1932649-1 CP30200GM3 67881 HBLBH HBLBI HAFBG HAFBH HAGBF HAGBG HAGBJ HBLBJ AABIE AABIF AABIG AABIH AABIJ AABIK AACBE AACBF AACBG ABIBF ABIBG ABIBH AACBH AACBI AACBJ AACBK AACBL AAIBD AAIBF AAIBI AANBJ AAQBH AAQBI AARBG AARBH AARBI AAXBD ABAAF ABBBF AIDB0