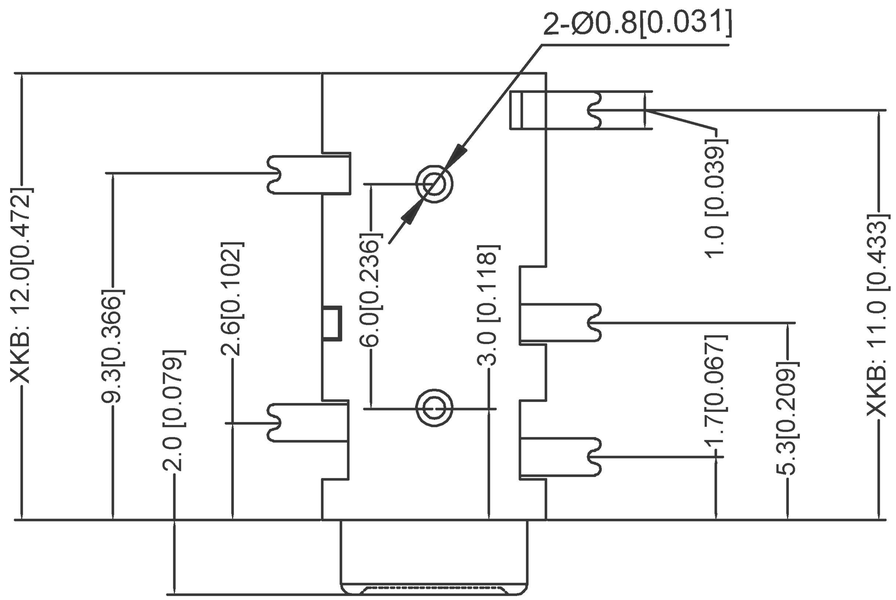

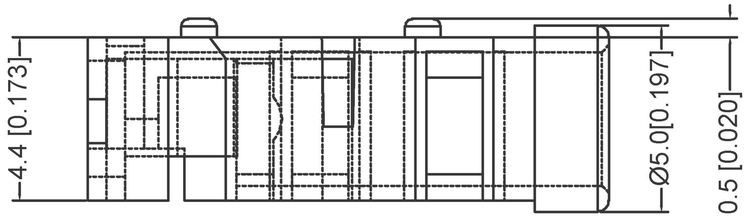

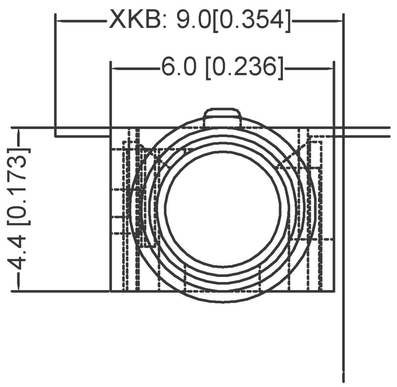

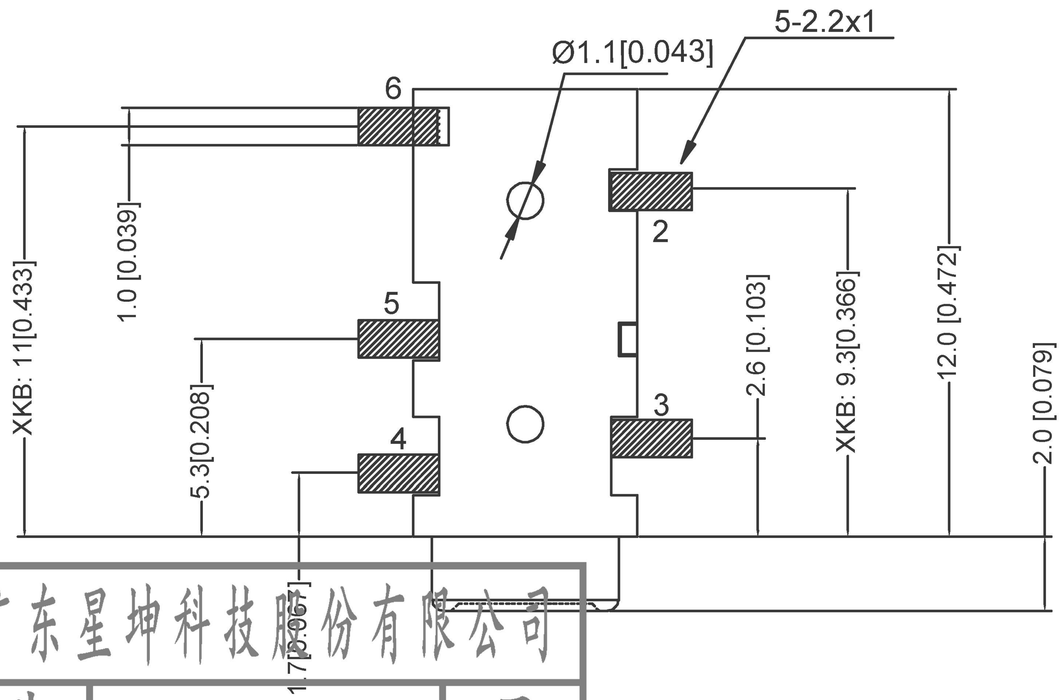

PJ-327ST-SMT	PJ-327ST-SMT-1	PJ-327ST-SMT-2	PJ-327ST-SMT-3	PJ-327ST-SMT-4
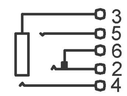	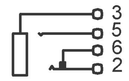	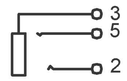	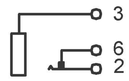	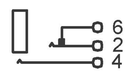

	MATERIAL	PLATING
terminal 2	Phosphor Bronze	Gold
terminal 3	Phosphor Bronze	Gold
terminal 4	Phosphor Bronze	Gold
terminal 5	Phosphor Bronze	Gold
terminal 6	Phosphor Bronze	Gold
plastic	High Temp. Thermoplastic	

广东星坤科技股份有限公司

生效		日期
ΔX		
ΔX		
ΔX		

文件工程章

MARK	DESCRIPTION	DATE	REVISED	APPROVED

REVISIONS

ANGLAR	±5°
X.X	±0.2mm
X.XX	±0.1mm
X.XXX	±0.05mm

UNSPECIFIED TOLERANCES

DSND		DATE		SCALE: N/A
DWN		DATE		VIEW:
CHKD		DATE		UNIT: mm/in
APPD		DATE		SIZE: A4

XKB INDUSTRIAL PRECISION CO. LIMITED

MODEL TYPE: 3.5 PHONE JACK

PART NO.:

DWG NO.: PJ-327ST-SMT

WEIGHT	SHEET	REVISION

X-ON Electronics

Largest Supplier of Electrical and Electronic Components

Click to view similar products for Circular DIN Connectors ***category:***

Click to view products by XKB ***manufacturer:***

Other Similar products are found below :

M83723/76W22326 M83723/78R22327 D38999/26FE99SN L/C 75-069228-21J 7519021610P 75-190224-28S 803000A09M040 FRCIR020R-18-19S FRCIR030FP-28-21S FRCIR030RFP-40A-38P-F80 FRCIR06F-40A-38S-F80 FRCIR06R-14S-6S FRCIR08CFZ-22-14S-F80 88-569723-03P 88-569735-06P 88-569769-19P 8R3006A18M0033 GTC00G-24-7S PT05A-14-18SW(023) PT05A-14-5SX PT05A1832SW PT05A2041SX GTC030-20-27PW-LC 1211290078 1211810025 ACC06AF-20-23P(003) 1210503216 1211290084 ACS00F-16-10S(003) ACS06AF-16-10P(003) D38999/40FB35AN D38999/40FB35BB D38999/40WB35BN D38999/40WD35PN D38999/40WJ29SN-L/C D38999/40WJ4BN D38999/42FB35BN D38999/42WB35AB D38999/42WB35PB-L/C D38999/42WJ19AN D38999/42WJ24PN-L/C D38999/44WB35AN D38999/44WH21AN D38999/44WH35AN D38999/44WJ29BA D38999/44WJ35PN D38999/44WJ61BA 12DL6MX AFD54-10-6PN-6117 L/T AFD57-22-12S-6141