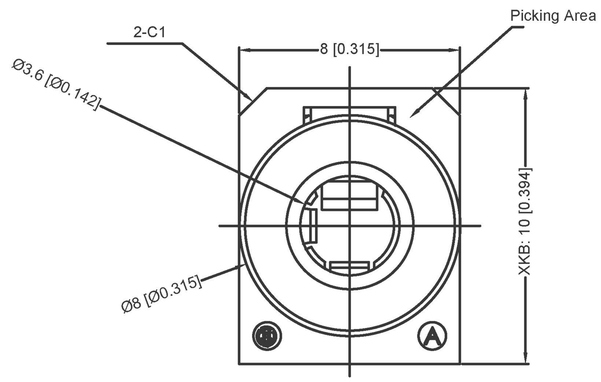

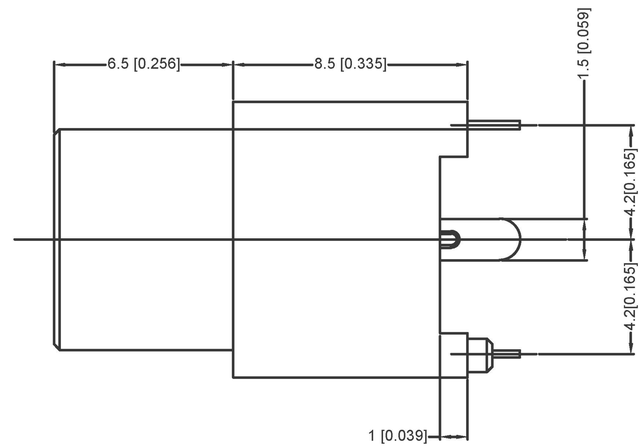

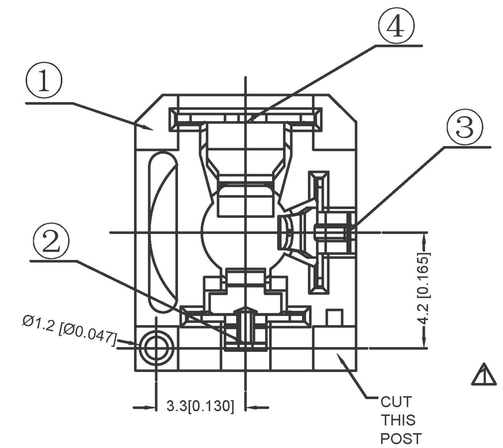

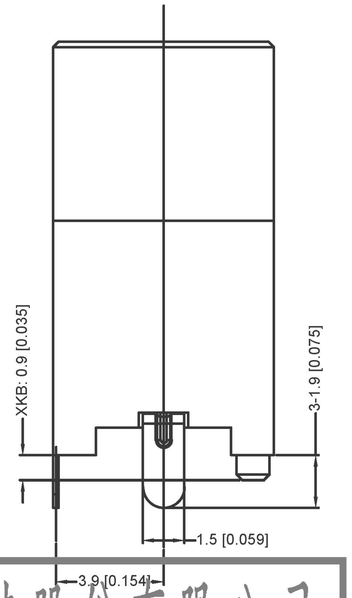

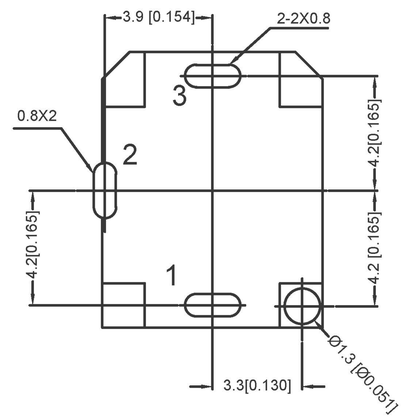

PCB HOLES(TOP VIEW) t=1.2mm

NOTE:GENERAL TOLERANCE:±0.05mm

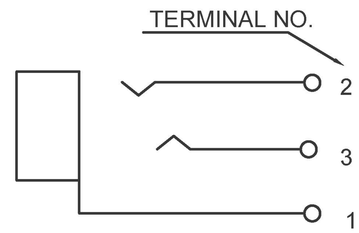

SCHEMATIC

	MATERIAL		PLATING
TIP SPRING	PHOSPHOR BRONZE	t=0.3	Sn
RING SPRING	PHOSPHOR BRONZE	t=0.2	Sn
SLEEVE SPRING	PHOSPHOR BRONZE	t=0.25	Sn
HOUSING	HIGH TEMP.THERMOPLASTIC UL94V-0		GRAY

广东星坤科技股份有限公司
生效日期
文件工程章

MARK	DESCRIPTION	DATE	REVISED	APPROVED
ΔX				
ΔX				
ΔX				

REVISIONS

ANGLAR	±5°
X.X	±0.2mm
X.XX	±0.1mm
X.XXX	±0.05mm

UNSPECIFIED TOLERANCES

www.xk-dg.cn www.helloxkb.com www.helloxkb.cn

DSND		DATE		SCALE: N/A
DWN		DATE		VIEW:
CHKD		DATE		UNIT: mm
APPD		DATE		SIZE: A4

XKB INDUSTRIAL PRECISION CO.,LIMITED

MODEL TYPE: 3.5 PHONE JACK

PART NO.:

DWG NO.: PJ-3543

WEIGHT	SHEET	REVISION
1.0g	1/1	A0

X-ON Electronics

Largest Supplier of Electrical and Electronic Components

Click to view similar products for HDMI, Displayport & DVI Connectors ***category:***

Click to view products by XKB ***manufacturer:***

Other Similar products are found below :

30-528 30-504 33DVIR-24S1B 47648-2000 TC142X 1932649-1 HAGBH ABIBG AAIBH 52355 XHLJQ-00026 HDMI-019R G46M2013201AWEU ST-0277D00-052-142 HC-PJ-320A-3P-D HC-PJ-3133-5P-D PJ-342 141 PJ-320A-4P DIP HC-PJ-325C-5P HC-PJ-320D-4P-S HC-PJ-3133-6P-S D-SUB-DR-9PCM-CB ST-0275S00-082-182 HC-PJ-320A-4P-D HC-PJ-325A-5P HC-PJ-3134-6P-D HDR-HX-102DIP HDMI-GD-121PWB C2939191 C2939584 PJ-208 PJ-2040 PJ-3580A-6A PJ-399M PJ-328B-4B PJ-3930-7A PJ-615-5A PJ-332-6A KH-HDMI-0001 KH-PJ-209-SMT KH-HDMI-0035-XK KH-PJ-328A-5P KH-PJ-322 KH-PJ-327E-SMT KH-PJ-320A-5.6 KH-HDR15P-F3.08 KH-HDMI-0005A-SMT KH-HDMI-0021-JBS KH-HDMI-0002 KH-PJ-234-4P-SMT