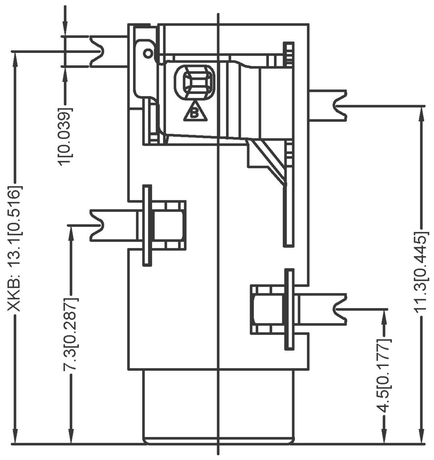

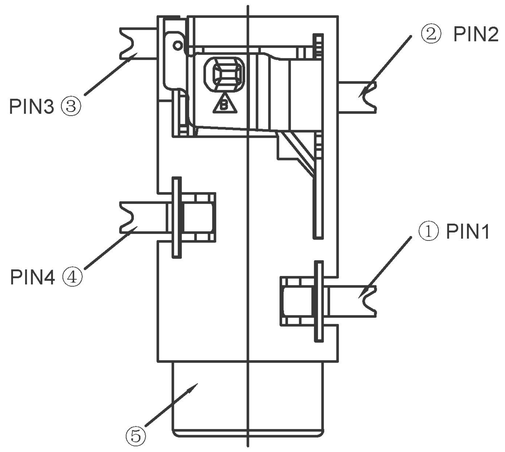

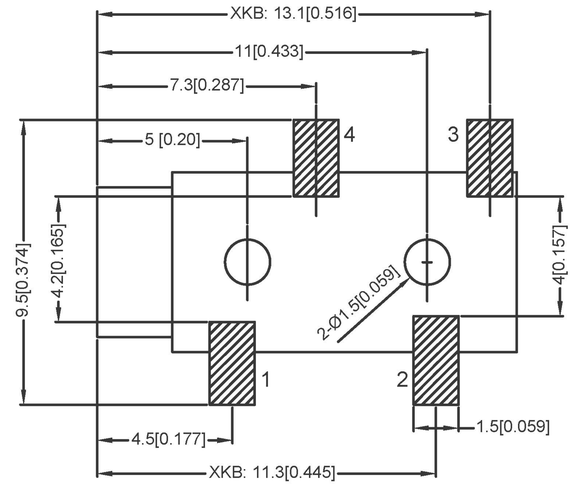

PCB LAYOUT TOP VIEW

TOLERANCES :±0.05

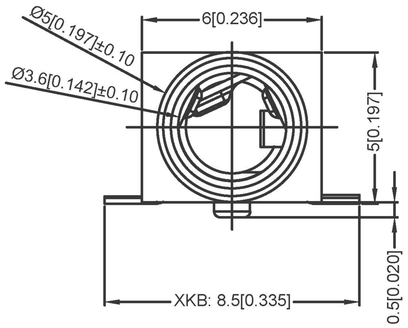

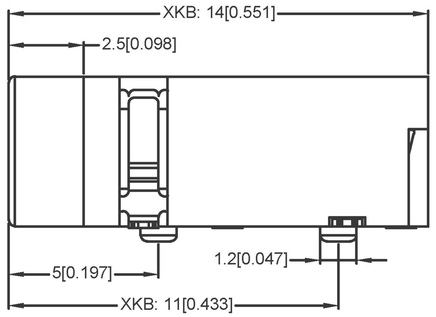

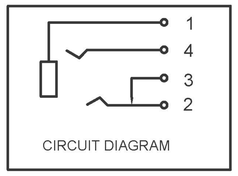

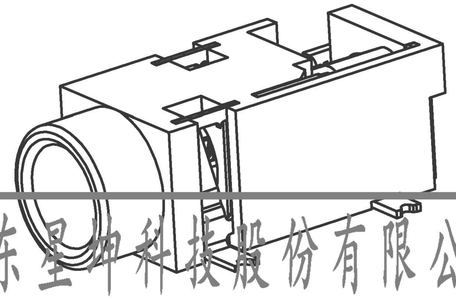

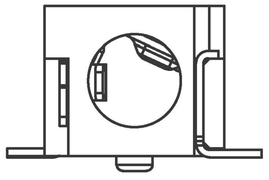

No.	PART NAME	QTY	MATERIAL(THICK)	PLATING(COLOR)
⑤	HOUSING	1	PA9T	SEE TABLE
④	TERMINAL 4#	1	PHOSPHOR BRONZE t=0.20	Ag-Plated
③	TERMINAL 3#	1	BRASS t=0.25	Ag-Plated
②	TERMINAL 2#	1	PHOSPHOR BRONZE t=0.25	Ag-Plated
①	TERMINAL 1#	1	PHOSPHOR BRONZE t=0.20	Ag-Plated

广东星坤科技股份有限公司
生效日期
文件工程章

MARK	DESCRIPTION	DATE	REVISED	APPROVED
ΔX				
ΔX				
ΔX				

REVISIONS

UNSPECIFIED TOLERANCES	
ANGLAR	±5°
X.X	±0.2mm
X.XX	±0.1mm
X.XXX	±0.05mm

DSND		DATE		SCALE: N/A
DWN		DATE		VIEW:
CHKD		DATE		UNIT: mm/in
APPD		DATE		SIZE: A4

XKB INDUSTRIAL PRECISION CO. LIMITED

MODEL TYPE: 3.5 PHONE JACK

PART NO.:

DWG NO.: PJ-35825

WEIGHT	SHEET	REVISION

X-ON Electronics

Largest Supplier of Electrical and Electronic Components

Click to view similar products for HDMI, Displayport & DVI Connectors ***category:***

Click to view products by XKB ***manufacturer:***

Other Similar products are found below :

30-1231 30-528 30-504 30-519 33DVIR-24S1B 47648-2000 2002-400 TC142X 769-103/021-000 1932649-1 CP30200GM3 67881 HBLBH HBLBI HAFBG HAFBH HAGBF HAGBG HAGBJ HBLBJ AABIE AABIF AABIG AABIH AABIJ AABIK AACBE AACBF AACBG ABIBF ABIBG ABIBH AACBH AACBI AACBJ AACBK AACBL AAIBD AAIBF AAIBI AANBJ AAQBH AAQBI AARBG AARBH AARBI AAXBD ABAAF ABBBF AIDB0