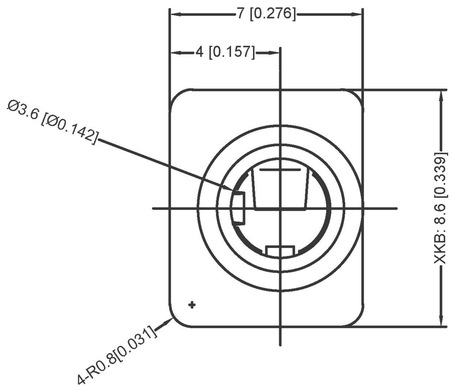

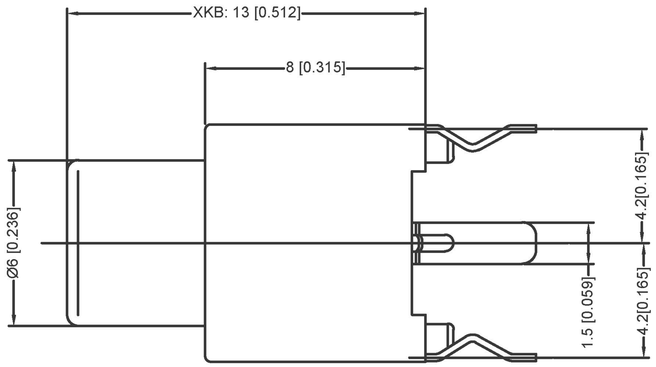

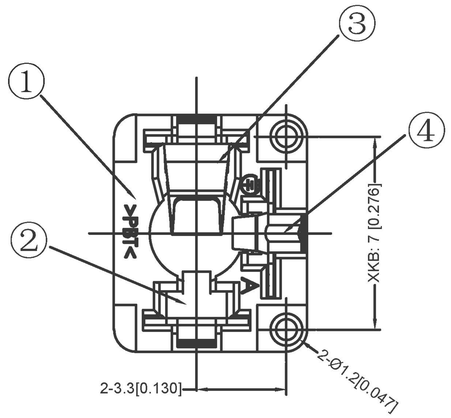

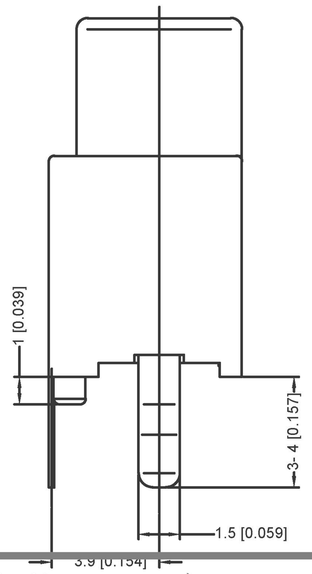

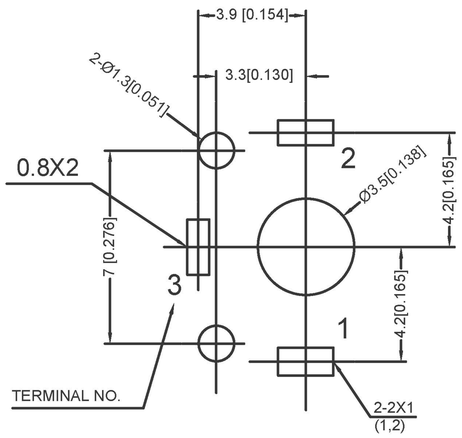

PCB HOLES(TOP VIEW) t=1.2/1.6mm
NOTE:GENERAL TOLERANCE:±0.1mm ⚠

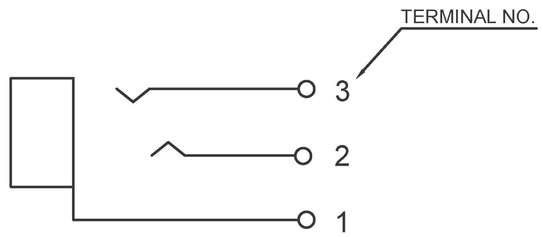

SCHEMATIC

	MATERIAL		PLATING
RING SPRING	PHOSPHOR BRONZE	t=0.2	Ag-PLATED
TIP SPRING	PHOSPHOR BRONZE	t=0.3	Ag-PLATED
SLEEVE SPRING	PHOSPHOR BRONZE	t=0.25	Ag-PLATED
HOUSING	PBT 94V-0		BLACK

广东星坤科技股份有限公司
生 日
ΔX 数 期
ΔX
ΔX
文 件 工 程 章

MARK	DESCRIPTION	DATE	REVISED	APPROVED

REVISIONS

ANGLAR	±5°	
X.X	±0.2mm	
X.XX	±0.1mm	
X.XXX	±0.05mm	

UNSPECIFIED TOLERANCES

www.xk-dg.cn www.helloxkb.com www.helloxkb.cn

DSND		DATE		SCALE: N/A
DWN		DATE		VIEW:
CHKD		DATE		UNIT: mm/in
APPD		DATE		SIZE: A4

XKB INDUSTRIAL PRECISION CO.,LIMITED

MODEL TYPE: 3.5 PHONE JACK

PART NO.:

DWG NO.: PJ-3584

WEIGHT	SHEET	REVISION
1.0g	1/1	A0

X-ON Electronics

Largest Supplier of Electrical and Electronic Components

Click to view similar products for HDMI, Displayport & DVI Connectors ***category:***

Click to view products by XKB ***manufacturer:***

Other Similar products are found below :

30-1231 30-528 30-504 30-519 33DVIR-24S1B 47648-2000 2002-400 TC142X 769-103/021-000 1932649-1 CP30200GM3 67881 HBLBH HBLBI HAFBG HAFBH HAGBF HAGBG HAGBJ HBLBJ AABIE AABIF AABIG AABIH AABIJ AABIK AACBE AACBF AACBG ABIBF ABIBG ABIBH AACBH AACBI AACBJ AACBK AACBL AAIBD AAIBF AAIBI AANBJ AAQBH AAQBI AARBG AARBH AARBI AAXBD ABAAF ABBBF AIDB0