SMD Power Inductors
-YSPIT0650A Series

■ Features

- Molding Inductor.
- High reliability.
- High current，low DCR，high efficiency.
- Very low acoustic noise and very low leakage flux noise.
- Operating temperature:-55℃ ~ +125℃（Including self-temperature rise）.

■ Applications

- General Electronic.
- Video Device,TV,TFT.
- Power Module for PC.
- NB/Lap Top Computer.
- Server,VGA Card/Module.
- DC/DC converter.

■ Product Identification

YSPIT □□□□□ — □□□ □

(1) (2) (3) (4)

(1)： Type

(2)： Dimensions

(3)： Inductance value

(4)： Inductance Tolerance：N=±30%,M=±20%

■ Shapes and Dimensions (Unit： mm)

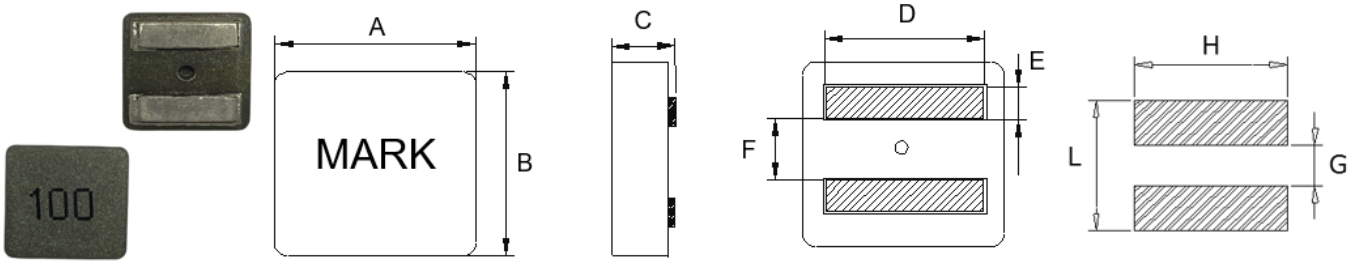

TYPE	A	B	C	D	E	F	G Ref.	H Ref.	L Ref.
YSPIT0650A	6.6±0.2	6.4±0.2	4.8±0.2	5.2±0.4	1.4±0.3	2.6±0.3	2.5	5.6	5.6

■ YSPIT0650A Series

Part Number	Inductance (uH) @100KHz/0.1V	DCR Max. (mΩ)	Saturation Current (A)		Heat Rating Current Typ.(A)	
			Max.	Typ.	20℃ rise	40℃ rise
YSPIT0650A-R82M	0.82±20%	4.2	20.0	24.0	16.0	21.0
YSPIT0650A-1R0M	1.0±20%	4.6	18.0	23.0	15.0	20.0
YSPIT0650A-1R2M	1.2±20%	5.9	16.0	22.0	14.0	18.0
YSPIT0650A-1R5M	1.5±20%	6.3	14.5	19.5	13.0	17.0
YSPIT0650A-1R8M	1.8±20%	7.1	13.5	18.5	12.0	16.0
YSPIT0650A-2R2M	2.2±20%	8.5	12.0	16.0	10.0	13.0
YSPIT0650A-3R3M	3.3±20%	12.5	10.5	12.5	8.5	11.0
YSPIT0650A-4R3M	4.3±20%	16.2	8.5	11.0	7.0	9.0
YSPIT0650A-4R7M	4.7±20%	18.4	8.0	10.5	6.5	8.5

※ The saturation current value is the DC current value having inductance decrease down to 30%.(at 25℃)

※ The temperature rise current value is the DC current value having temperature increase up to 40℃. (at 25℃)

※ The rated current is the DC current value that satisfies both of current value saturation current value and temperature rise current value.

■ Mechanical Reliability

Item	Specification and Requirement	Test Method
Solderability	1. No case deformation or change in visual 2. New solder coverage More than 95%	1.Preheat：155℃±5℃ ， 60S±2S 2.Tin: lead-free. 3.Temperature:240℃±5℃， flux 3.0S±0.5S.
Mechanical shock	1. No case deformation or change in visual 2. △L/Lo≦±10%	1. Acceleration： 100G 2. Pulse time: ：6ms 3. 3 times in each positive and negative direction of 3 mutual perpendicular directions
Mechanical vibration	1. No case deformation or change in visual 2. △L/Lo≦±10%	1. Reflow: 2times 2. Frequency: 10HZ ~ 50HZ ~ 10HZ， 20 Min/Cycles 3. Amplitude: 1.52 mm±10% 4. Directions: X,Y,Z 5. Time: 12 cycle / direction

■ Endurance Reliability

Item	Specification and Requirement	Test Method
Thermal Shock	Inductance change: Within ± 10% Without distinct damage in visual	1. First -55℃° for 30 minutes， last 125℃° for 30 minutes as 1 cycle. Go through 1000 cycles. 2. Max transfer time is 3 minutes. 3. Measured at room temperature after placing for 24±2 hours
Biased Humidity	Inductance change: Within ± 10% Without distinct damage in visual	1.Reflow 2 times, 2.85℃°±3℃°,85%±3%RH,1000 hours 3.Measured at room temperature after placing for 24±2 hours
Low temperature storage	Inductance change: Within ± 10% Without distinct damage in visual	1. Temperature：-55 ± 2℃° 2. Time：1000 hours 3. Measured at room temperature after placing for 24±2 hours
High temperature storage	Inductance change: Within ± 10% Without distinct damage in visual	1. Temperature：+125 ± 2℃° 2. Time：1000 hours 3. Measured at room temperature after placing for 24±2 hours

■ Recommended Soldering Technologies

Re-flowing Profile

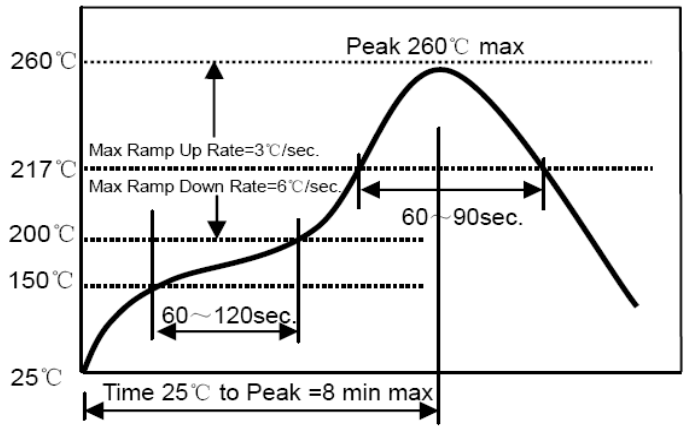

Preheat condition: 150 ~200℃/60~120sec.

Allowed time above 217℃: 60~90sec.

Peak temp: 260℃

Max time at Peak temp: 10 sec.

Solder paste: Sn/3.0Ag/0.5Cu

Allowed Reflow time: 2x max

Iron Soldering Profile

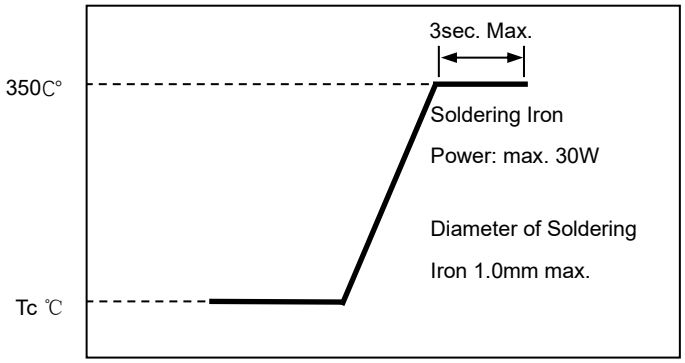

Iron soldering power: Max. 30W

Pre-heating: 150℃/60sec.

Soldering Tip temperature: 350℃ Max.

Soldering time: 3sec. Max.

Solder paste: Sn/3.0Ag/0.5Cu

Max.1 times for iron soldering

■ Taping Dimensions(Unit:mm)

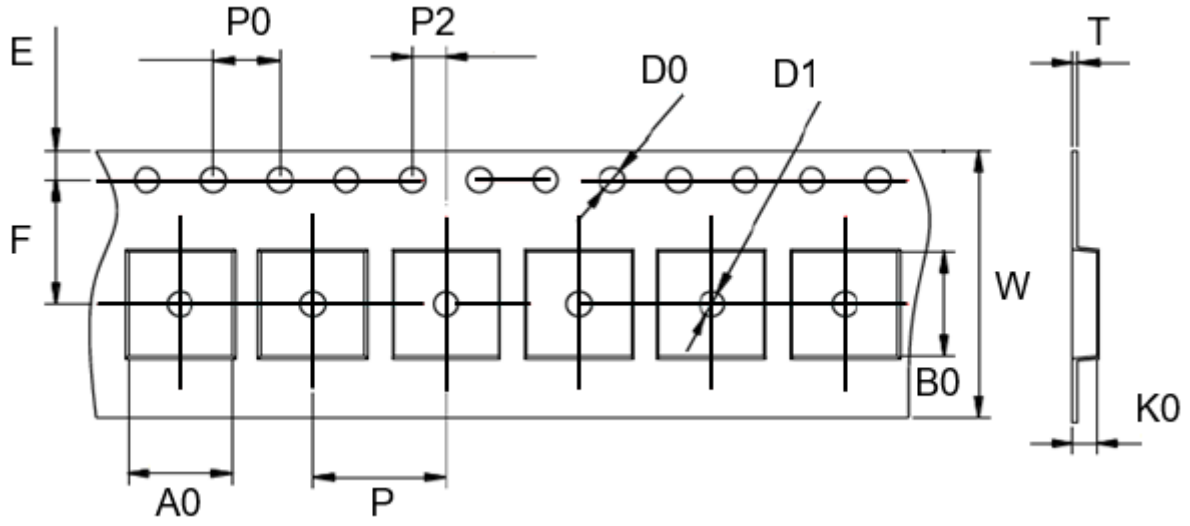

TYPE	W	P	P0	P2	D0	D1	T	A0	B0	K0	E	F	MPQ
YSPIT0650A	16 ±0.3	12 ±0.1	4 ±0.1	2 ±0.1	1.5 ±0.1	1.5 ±0.1	0.35 ±0.05	7.0 ±0.1	6.8 ±0.1	5.3 ±0.1	1.75 ±0.1	7.5 ±0.1	800

■ Reel Dimensions(Unit:mm)

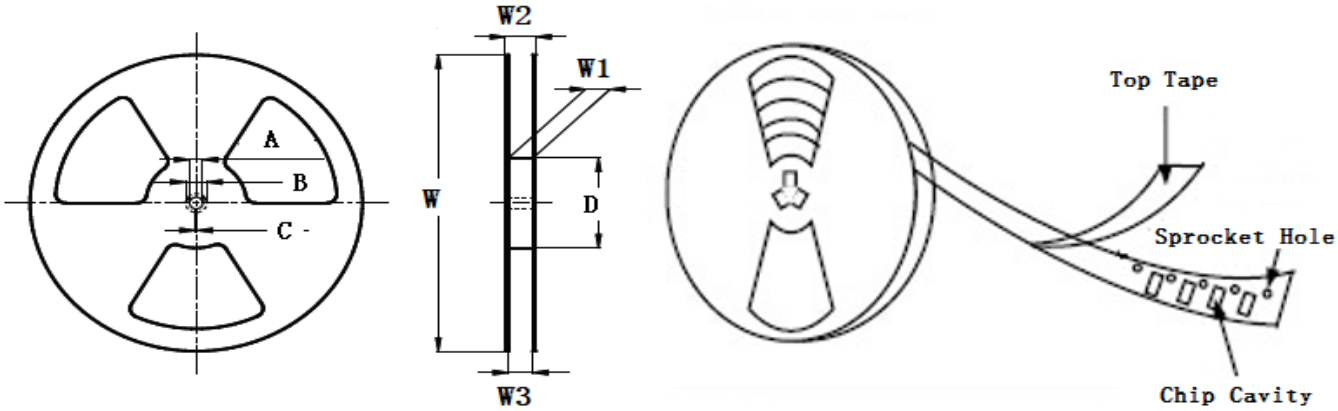

TYPE	W	W1	W2	W3	A	B	C	D
YSPIT0650A	330±2.0	16.4±2.0	22.4MAX	15.9 Min	13.0±0.5	21.0±0.8	2.0±0.5	97±0.5

■ Direction of rolling

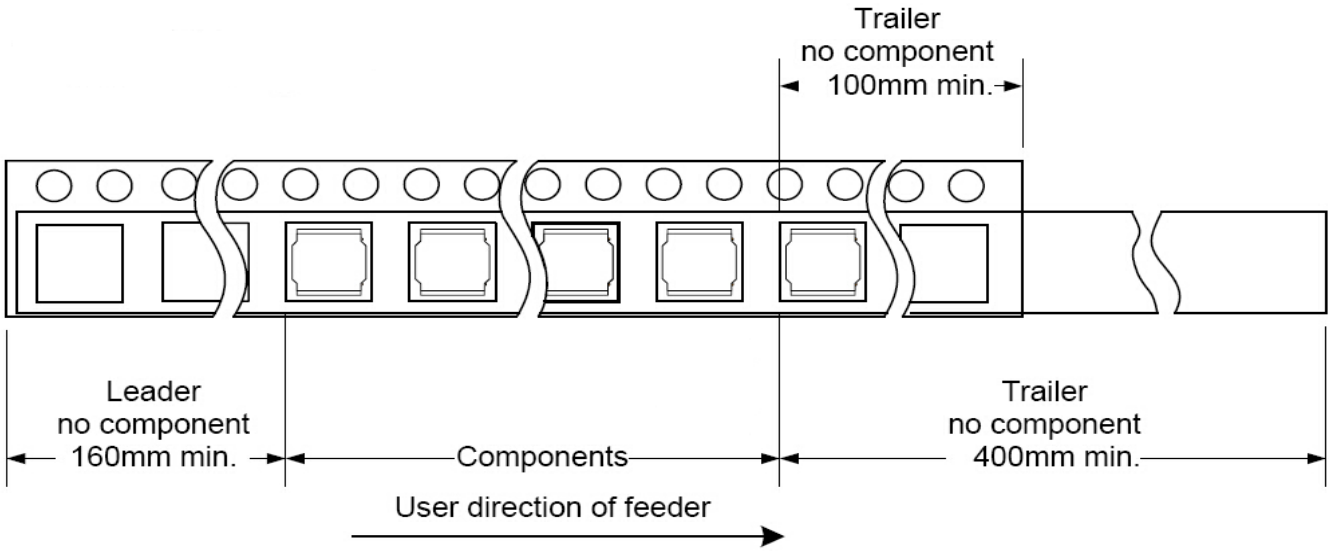

■ Cover tape peel off condition

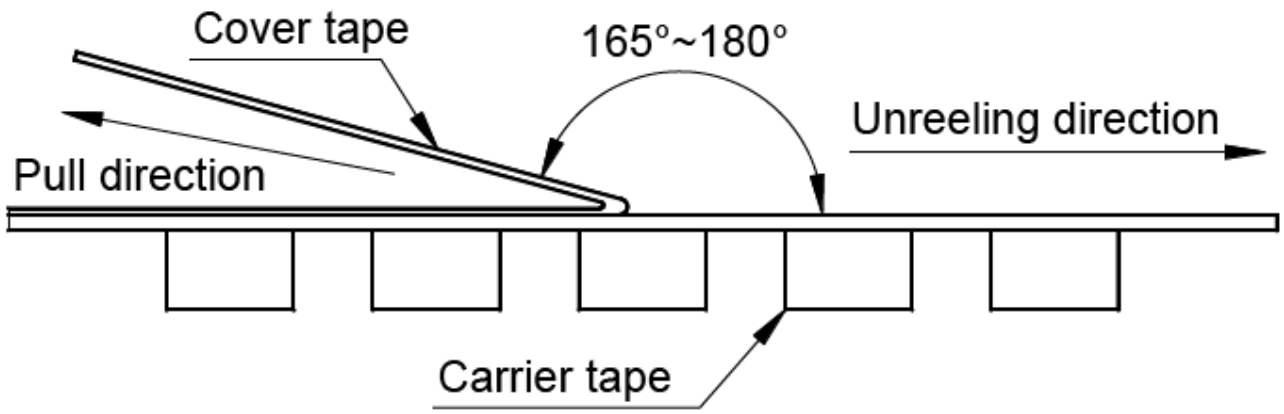

Cover tape peel force shall be 0.1N to 1.3N.

Reference peel speed 300±10mm/min.

X-ON Electronics

Largest Supplier of Electrical and Electronic Components

Click to view similar products for Fixed Inductors ***category:***

Click to view products by YJYCOIN ***manufacturer:***

Other Similar products are found below :

CR32NP-100KC CR54NP-470LC 70F224AI MGDQ4-00004-P MHQ1005P10NJ MHQ1005P1N0S MHQ1005P2N4S MHQ1005P3N6S MHQ1005P5N1S MHQ1005P8N2J PE-53601NL PE-53602NL PG0936.113NLT 9220-20 9310-16 PM06-2N7 PM06-39NJ A01TK 1206CS-471XJ HC2-R47-R HC8-1R2-R HCF1305-3R3-R 1206CS-151XG RCH664NP-140L RCH664NP-4R7M RCP1317NP-391L RCR110DNP-331L DH2280-4R7M DS1608C-106 B10TJ B82498B3101J000 ELJ-RE27NJF2 1812CS-153XJ 1812CS-183XJ 1812CS-223XJ 1812LS-104XJ 1812LS-105XJ 1812LS-124XJ 1812LS-154XJ 1812LS-223XJ 1812LS-224XJ 1812LS-563XJ 1812LS-683XJ 1812LS-824XJ NIN-FB101JTR110F NIN-FB471JTR62F NIN-FC1R5JTR220F NIN-HCR15JTRF NIN-HCR33JTRF NIN-HDR22JTRF